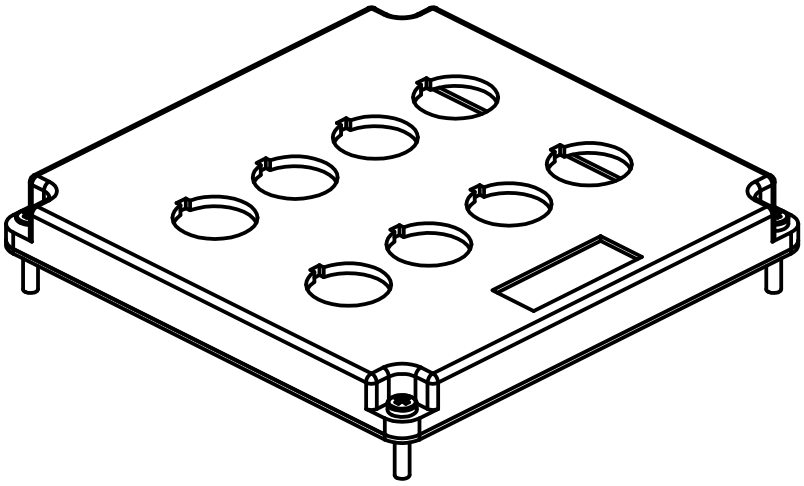

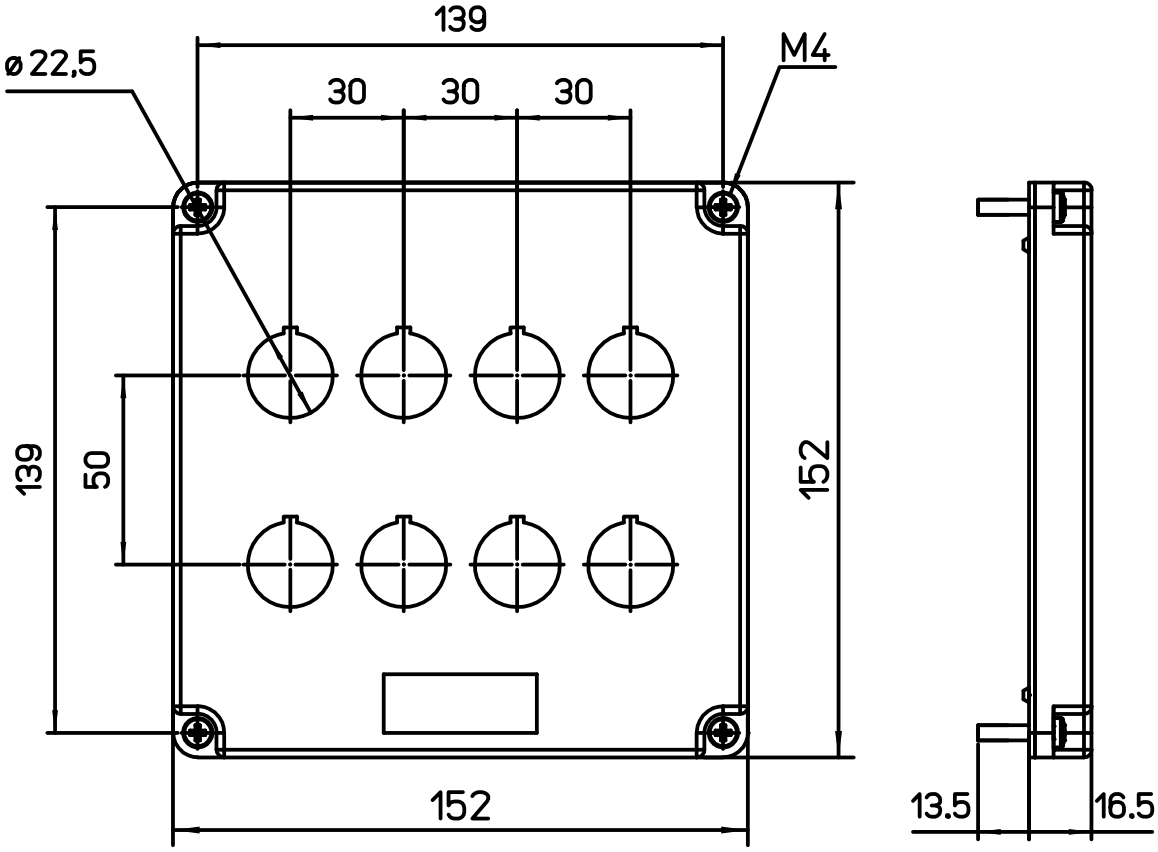

Diritti riservati All rights reserved

dimensions in mm	A2T 1515.08	Scale
Date 27/07/16	Cover 152x152x15	1:2
Sign. F.Zaffora		